LAMP FACTORY
LONDON

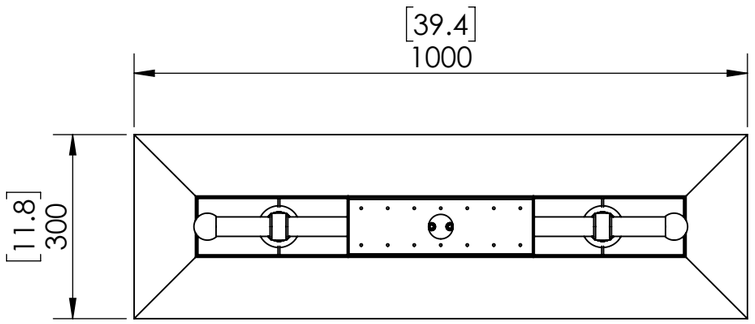

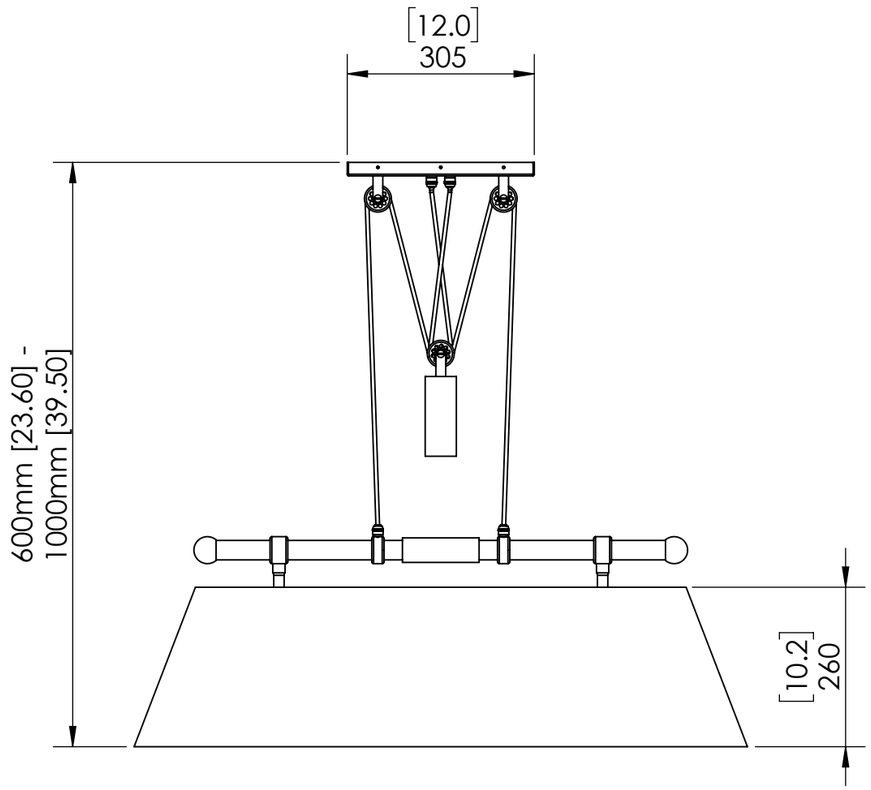

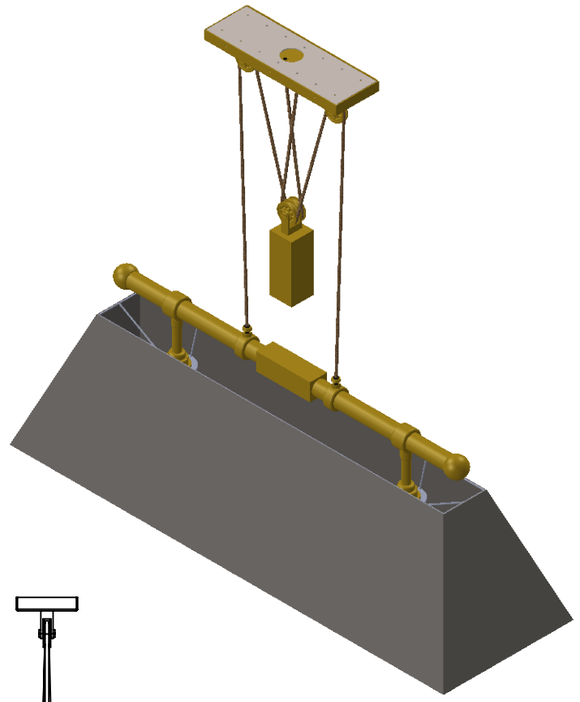

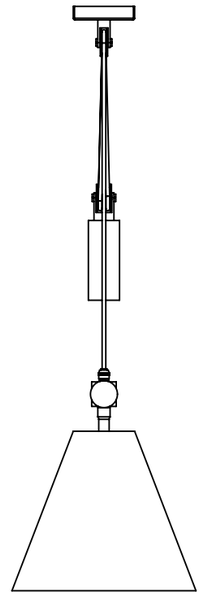

Voltage - UK/EU - 240v UL - 110v
Lamp Holders - UK/EU - E27 UL - E26
Weight: 16kg

Workshop Address
Avenue House Workshops,
8-28 Milton Avenue,
Croydon, Surrey, CR0 2BP

Telephone: 0208 683 0721

Emai: Info@thelampfactorylondon.co.uk